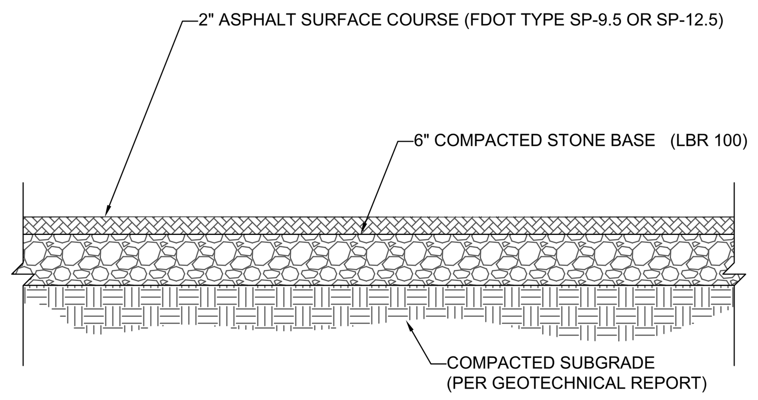

NOTE:
1. SECTION SHOWN IS BASED THE GEOTECHNICAL REPORT PREPARED BY ECS FLORIDA, LLC, ENTITLED SUBSURFACE EXPLORATION AND GEOTECHNICAL ENGINEERING REPORT GATEWAY INDUSTRIAL, DATED JULY 6, 2022 (PROJECT #25:3863 FINAL DESIGN TO BE PROVIDED ONCE FINAL CBR'S ARE AVAILABLE ON COMPACTED SUB-BASE.

STANDARD DUTY ASPHALT PAVEMENT SECTION
NOT TO SCALE

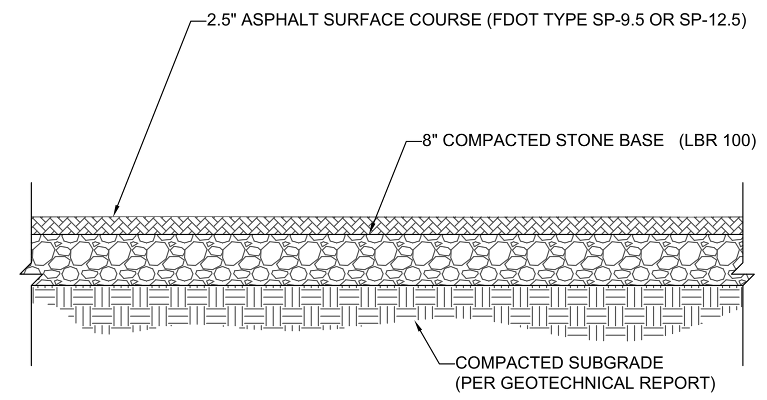

NOTE:
1. SECTION SHOWN IS BASED THE GEOTECHNICAL REPORT PREPARED BY ECS FLORIDA, LLC, ENTITLED SUBSURFACE EXPLORATION AND GEOTECHNICAL ENGINEERING REPORT GATEWAY INDUSTRIAL, DATED JULY 6, 2022 (PROJECT #25:3863 FINAL DESIGN TO BE PROVIDED ONCE FINAL CBR'S ARE AVAILABLE ON COMPACTED SUB-BASE.

HEAVY DUTY ASPHALT PAVEMENT SECTION
NOT TO SCALE

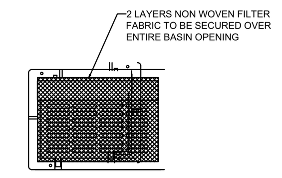

CURB INLET PROTECTION DETAIL NOT TO SCALE

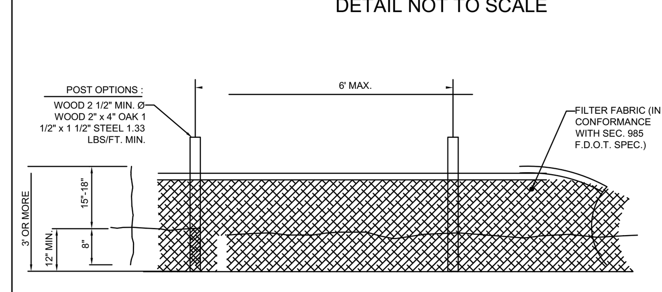

SILT FENCE DETAIL NOT TO SCALE (PER FDOT INDEX #102)

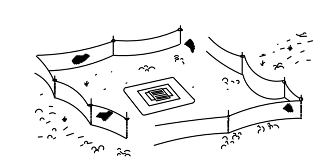

SILT FENCE PROTECTION AROUND DITCH BOTTOM INLETS

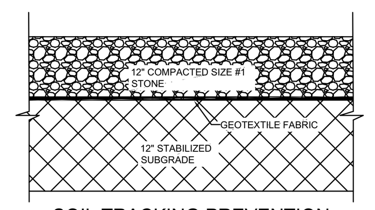

SOIL TRACKING PREVENTION MAT DETAIL NOT TO SCALE (PER FDOT INDEX #106)

1. EROSION AND SEDIMENT CONTROL BMP'S IN ADDITION TO THOSE PRESENTED ON THESE PLANS SHALL BE IMPLEMENTED AS NECESSARY TO PREVENT TURBID DISCHARGES FROM FLOWING ONTO ADJACENT PROPERTIES OR ROADWAYS, OFF SITE STORMWATER CONVEYANCES OR RECEIVING WATERS, OR ON SITE WETLANDS AND SURFACE WATERS. BMP'S SHALL BE DESIGNED, INSTALLED, AND MAINTAINED BY THE SITE OPERATOR TO ENSURE THAT OFF SITE SURFACE WATER QUALITY REMAINS CONSISTENT WITH STATE AND LOCAL REGULATIONS. [THE OPERATOR IS THE ENTITY THAT OWNS OR OPERATES THE CONSTRUCTION ACTIVITY AND HAS AUTHORITY TO CONTROL THOSE ACTIVITIES AT THE PROJECT NECESSARY TO ENSURE COMPLIANCE.]
2. OFF SITE SURFACE WATER DISCHARGES, OR DISCHARGES TO ONSITE WETLANDS OR SURFACE WATERS WITH TURBIDITY IN EXCESS OF 29 NEPHELOMETRIC TURBIDITY UNITS (NTU'S) ABOVE BACKGROUND LEVEL SHALL BE IMMEDIATELY CORRECTED. SUCH INCIDENTS SHALL BE REPORTED TO WATER RESOURCES WITHIN 24 HOURS OF THE OCCURRENCE. THE REPORT SHALL INCLUDE THE CAUSE OF THE DISCHARGE AND CORRECTIVE ACTIONS TAKEN.
3. THE OPERATOR SHALL ENSURE THAT ADJACENT PROPERTIES ARE NOT IMPACTED BY WIND EROSION, OR EMISSIONS OF UNCONFINED PARTICULATE MATTER IN ACCORDANCE WITH RULE 62-296.320(4)(C)1, F.A.C., BY TAKING APPROPRIATE MEASURES TO STABILIZE AFFECTED AREAS.
4. FUEL AND OTHER PETROLEUM PRODUCT SPILLS THAT ENTER STORMWATER DRAINS OR WATERBODIES, OR FUEL AND OTHER PETROLEUM PRODUCT SPILLS THAT ARE IN EXCESS OF 25 GALLONS SHALL BE CONTAINED, CLEANED UP, AND IMMEDIATELY REPORTED TO WATER RESOURCES. SMALLER GROUND SURFACE SPILLS SHALL BE CLEANED UP AS SOON AS PRACTICAL.
5. IF CONTAMINATED SOIL AND/OR GROUNDWATER IS DISCOVERED DURING DEVELOPMENT OF THE SITE, ALL ACTIVITY IN THE VICINITY OF THE CONTAMINATION SHALL IMMEDIATELY CEASE, AND WATER RESOURCES SHALL BE CONTACTED.
6. PRIOR TO DEMOLITION OF EXISTING ON SITE STRUCTURES AN ASBESTOS SURVEY AND/OR ASBESTOS NOTIFICATION MAY BE REQUIRED.
7. NATIONAL POLLUTANT DISCHARGE ELIMINATION SYSTEM:
   A. NPDES CONSTRUCTION GENERIC PERMIT COVERAGE SHALL BE OBTAINED AT LEAST 48 HOURS IN ADVANCE OF CONSTRUCTION COMMENCEMENT IN ACCORDANCE WITH RULE 62-621.300(4)(a), F.A.C.
   B. A COPY OF THE CERTIFIED NPDES NOI, OR A COPY OF THE FDEP COVERAGE CONFIRMATION LETTER SHALL BE POSTED AT THE SITE IN ACCORDANCE WITH RULE 62-621.300(4)(A) PART III.C.2, F.A.C.
   C. A COPY OF THE CERTIFIED NPDES NOI, OR A COPY OF THE FDEP COVERAGE CONFIRMATION LETTER SHALL BE PROVIDED TO WATER RESOURCES IN ACCORDANCE WITH RULE 62-621.300(4)(a)PART III.D.1, F.A.C.
   D. THE SWPPP SHALL BE CERTIFIED IN ACCORDANCE WITH RULE 62-621.300(4)(a)PART V.D.6, F.A.C.
   E. A COPY OF THE SWPPP, AND COPIES OF THE INSPECTION AND MAINTENANCE RECORDS SHALL BE MAINTAINED AT THE PROJECT SITE, AND SHALL BE READILY AVAILABLE TO COUNTY OR STATE INSPECTORS.
8. THE DISCHARGE OF GROUNDWATER PRODUCED THROUGH DEWATERING, TO SURFACE WATERS, OR ANY PORTION OF THE MS4 WILL REQUIRE SEPARATE PERMITTING FROM THE FLORIDA DEPARTMENT OF ENVIRONMENTAL PROTECTION (DEP). PERMIT(S) SHALL BE OBTAINED PRIOR TO THE COMMENCEMENT OF DEWATERING.

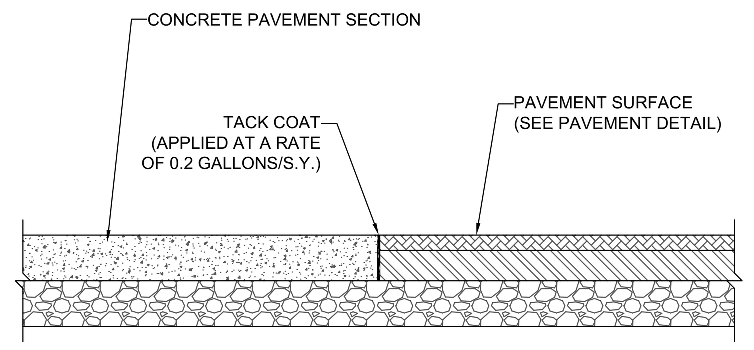

CONCRETE-TO-ASPHALT DETAIL
NOT TO SCALE

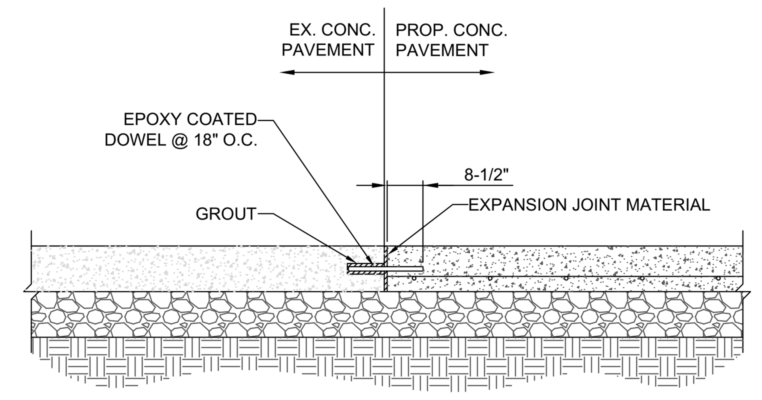

NOTE:
1. CONTRACTOR TO BLOW OUT DUST FROM DRILLED HOLES PRIOR TO APPLYING GROUT.

CONCRETE DOWELING DETAIL
NOT TO SCALE

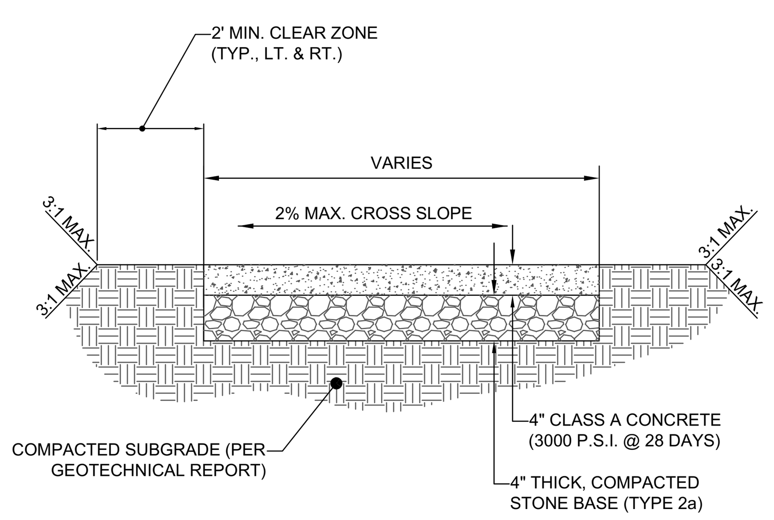

NOTE:
1. EXPANSION JOINTS 1/2" WIDE PREMOLDED BIT. MATERIAL SHALL BE INSTALLED AT 30' INTERVALS, CRACK CONTROL JOINTS TO BE SPACED AT INTERVALS EQUAL TO SIDEWALK WIDTH.

CONCRETE SIDEWALK DETAIL
NOT TO SCALE

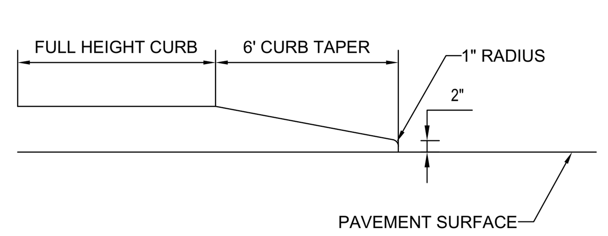

CURB TAPER DETAIL
NOT TO SCALE

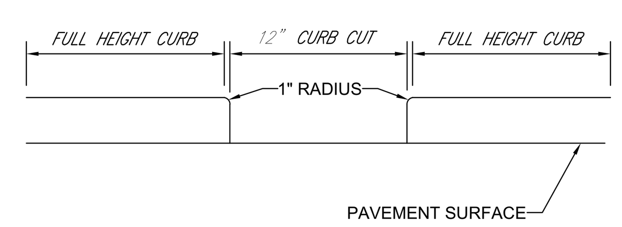

CURB CUT DETAIL
NOT TO SCALE

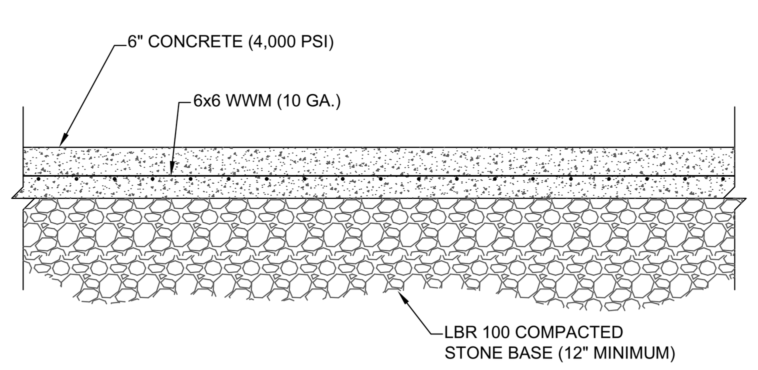

NOTE:
1. SECTION SHOWN IS BASED THE GEOTECHNICAL REPORT PREPARED BY ECS FLORIDA, LLC, ENTITLED SUBSURFACE EXPLORATION AND GEOTECHNICAL ENGINEERING REPORT GATEWAY INDUSTRIAL, DATED JULY 6, 2022 (PROJECT #25:3863 FINAL DESIGN TO BE PROVIDED ONCE FINAL CBR'S ARE AVAILABLE ON COMPACTED SUB-BASE.

HEAVY DUTY CONCRETE SECTION
NOT TO SCALE

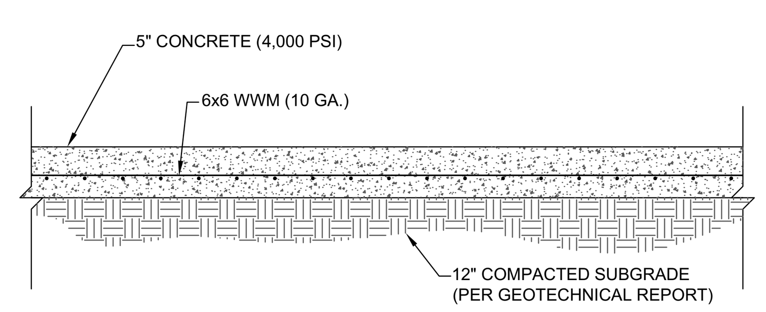

NOTE:
1. ECTION SHOWN IS BASED THE GEOTECHNICAL REPORT PREPARED BY ECS FLORIDA, LLC, ENTITLED SUBSURFACE EXPLORATION AND GEOTECHNICAL ENGINEERING REPORT GATEWAY INDUSTRIAL, DATED JULY 6, 2022 (PROJECT #25:3863 FINAL DESIGN TO BE PROVIDED ONCE FINAL CBR'S ARE AVAILABLE ON COMPACTED SUB-BASE.

STANDARD DUTY CONCRETE SECTION
NOT TO SCALE

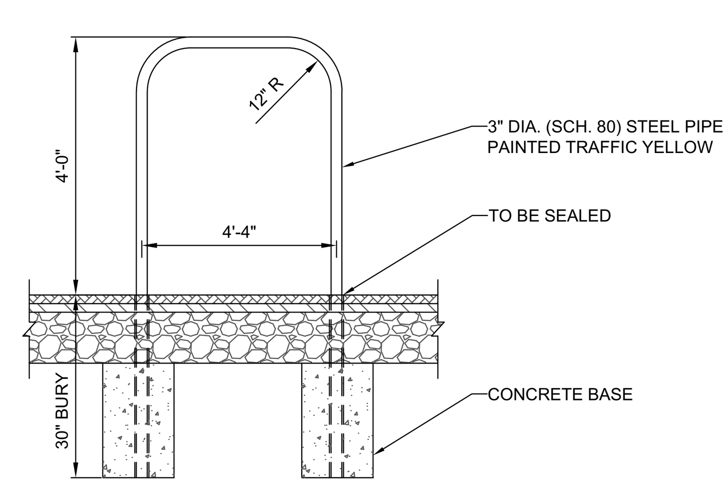

`U' SHAPED BOLLARD DETAIL
NOT TO SCALE

DRC
PZ22-12000009
02/01/2023

BOHLER
SITE CIVIL AND CONSULTING ENGINEERING
LAND SURVEYING
PROGRAM MANAGEMENT
LANDSCAPE ARCHITECTURE
SUSTAINABLE DESIGN
PERMITTING SERVICES
TRANSPORTATION SERVICES

THE INFORMATION, DESIGN AND CONTENT OF THIS PLAN ARE PROPRIETARY AND SHALL NOT BE COPIED OR USED FOR ANY PURPOSE WITHOUT PRIOR WRITTEN AUTHORIZATION FROM BOHLER. ONLY APPROVED, SIGNED AND SEALED PLANS SHALL BE UTILIZED FOR CONSTRUCTION PURPOSES
© BOHLER

REVISIONS

REV	DATE	COMMENT	DRAWN BY / CHECKED BY

811 Know what's below. Call before you dig.
ALWAYS CALL 811
It's fast. It's free. It's the law.

SITE PLAN SET

THIS DRAWING IS INTENDED FOR MUNICIPAL AND/OR AGENCY REVIEW AND APPROVAL. IT IS NOT INTENDED AS A CONSTRUCTION DOCUMENT UNLESS INDICATED OTHERWISE.

PROJECT No.:	FLB210118
DRAWN BY:	HD
CHECKED BY:	CL
DATE:	02/21/2022
CAD I.D.:	CNDS

PROJECT:

PROP. SITE PLAN DOCUMENTS

FOR

ALLIANCE HP

GATEWAY INDUSTRIAL

SW 27TH AVENUE
POMPANO BEACH, FL 33069

BOHLER
1900 NW CORPORATE BOULEVARD
SUITE 101E
BOCA RATON, FLORIDA 33431
Phone: (561) 571-0280
Fax: (561) 571-0281
FLORIDA BUSINESS CERT. OF AUTH. No. 30780

MOHAMMED MEROUANE EL KAOUSSI LICENSE No. 88591 STATE OF FLORIDA PROFESSIONAL ENGINEER
Merouane El Kaoussi
E=melkaoussi@bohlereng.com, CN=Merouane El Kaoussi, O="BOHLER ENGINEERING FL, LLC", L=Boca Raton, S=Florida, C=US
2022.12.23 09:27:42-05'00'

THIS ITEM HAS BEEN DIGITALLY SIGNED AND SEALED BY MOHAMMED MEROUANE EL KAOUSSI, PE, ON THE DATE ADJACENT TO THE SEAL. PRINTED COPIES OF THIS DOCUMENT ARE NOT CONSIDERED SIGNED AND SEALED AND THE SIGNATURE MUST BE VERIFIED ON ANY ELECTRONIC COPIES.

SHEET TITLE:

CONSTRUCTION DETAILS

SHEET NUMBER:
C-901

ORG. DATE - 02/21/2022

Dec 22, 2022
H:\2021\FLB210118\CAD\DRAWINGS\PLAN SETS\FLB210118 - CNDS - 0---->LAYOUT: C-901 CONSTRUCTION DETAILS
AB